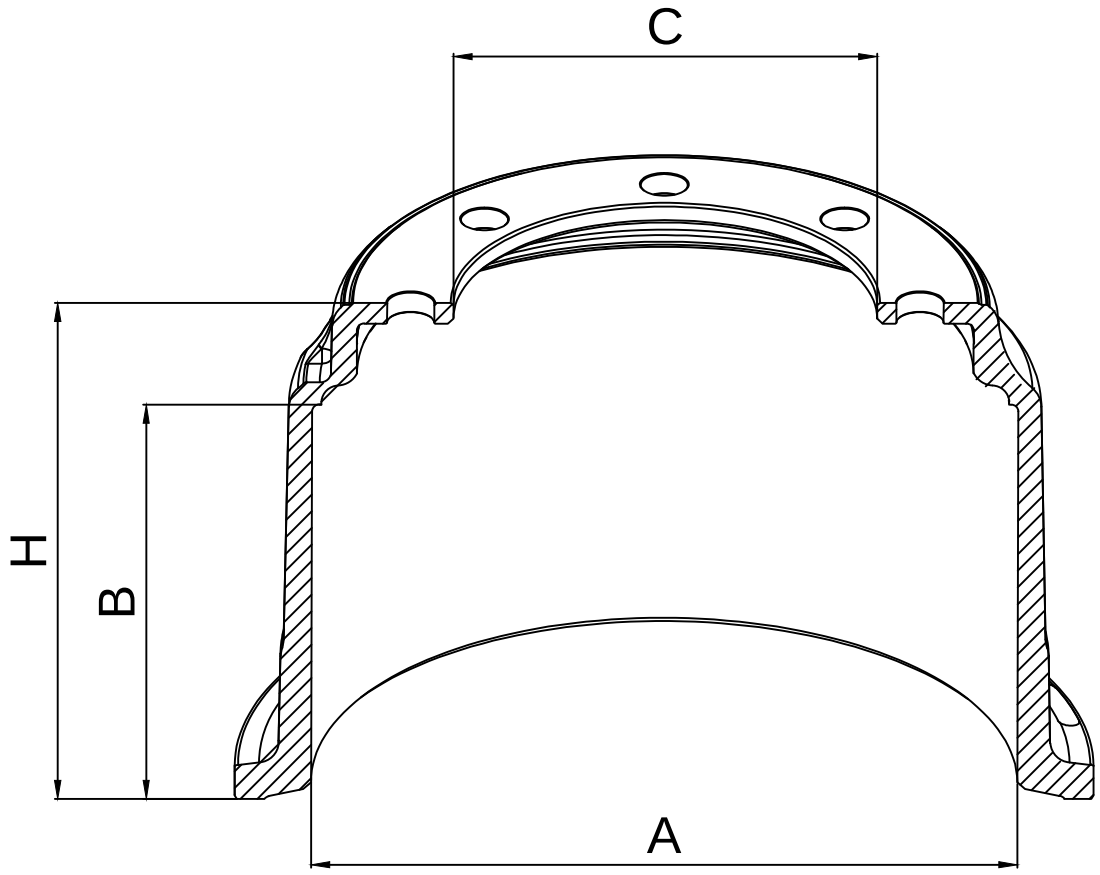
C
H
B
A

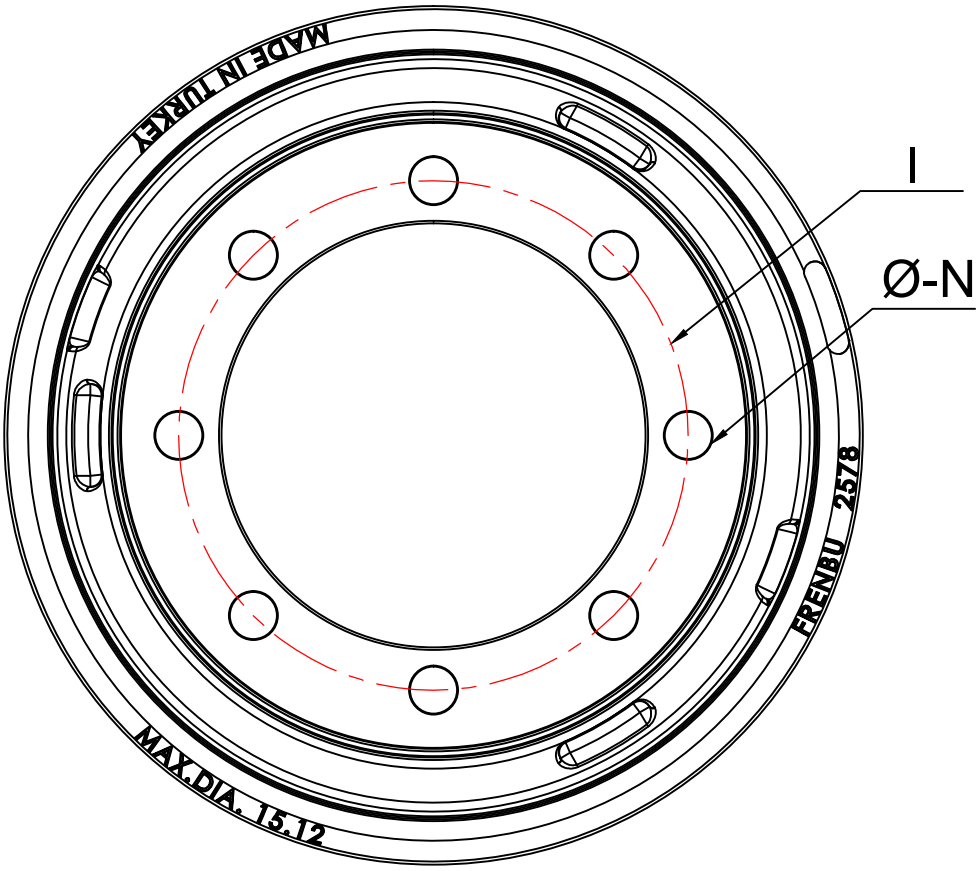
MADE IN TURKEY
I
Ø-N
FRENBU 2578
MAX.DIA. 15.12